PHASE | VISLINK:
Enlaces

- **IP LINK** Next Gen Digital Video/Data Microwave Systems.....p. 2
- **IP LINK-SM** Split-Mount Indoor/Outdoor Microwave Systems....p. 4
- **MVL-HD2 Series (DVB-S2)** Digital Portable Receiver……p. 6
- **MVL-HD2 Series (DVB-S2)** Digital Portable Transmitter……p. 8
- **MVL-HD2 Series (DVB-T)** Digital Portable Receiver…….……p. 10
- **MVL-HD2 Series (DVB-T)** Digital Portable Transmitter……...p. 12
- **2A20SS / 7A30SS** Solid State Feed Transmit Antenna.....p. 14
- **DXL5000 Series** Long-Haul Radio.....……...p. 16
- **DXL8000 Series** High Performance Short Haul Radio……....p. 18
- **STRATA** Portable Microwave Link System.....p. 20
- **PTX-PRO** Transmitter.....p. 22
- **PRX-PRO** Receiver.....p. 24

PHASE®

VISLINK

IPLink

Next Generation Digital Video/Data Microwave Systems

IPLink combines the features of a broadcast digital microwave point-to-point radio system with the modern efficiencies of a high-capacity long-distance bi-directional IP microwave radio design. It allows the broadcaster to smoothly migrate from the traditional ASI transport platform to a future IP-centric system architecture.

The system delivers ultra-high linear RF output performance coupled with the reliability that LDPC forward error correction (FEC) affords in controlling errors in data transmissions over long or unreliable microwave paths.

A key advantage of the IPLink is that it allows BAS 7 & 13 GHz simplex links to be transformed into affordable duplex IP Ethernet microwave systems within a T/R channel spacing as close as 75 MHz; a Vislink first.

Systems are available in Simplex, Duplex, Hot-Standby and *Spatial Diversity Receive configurations.

*Seamless switching available for non-protected duplex space diversity receive system configurations only.

Key Features

- All-indoor, space efficient 2RU x 19" (48cm) rack-mount
- Ultra-high linear broadband RF power amplifiers
- Exceptional System Gain Performance
- High capacity ASI & Gigabit Ethernet IP data transport
- Automatic Transmitter Power Control
- Adaptive Code Modulation
- User selectable modulations from QPSK to 256 QAM
- ANSI and ETSI channel bandwidths
- Intuitive Web-based GUI for monitoring/control

Typical Applications

- Studio-to-Transmitter Links (STL)
- Transmitter-to-Studio Links (TSL)
- Inter-city Relay Backhauls (ICR)
- Multi-hop Microwave Relay Systems
- High-capacity IP Microwave Systems

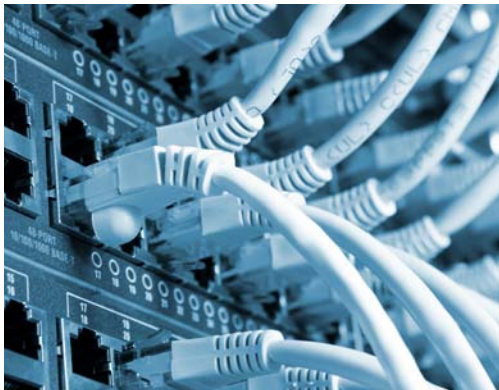

SPECIFICATIONS

VISLINK

RF PARAMETERS

RF Power Output Level (prior to filter branching)
- +34dBm to +27dBm* @ 6 GHz BAS
- +33dBm to +26dBm @ 7 GHz
- +32dBm to +25dBm @ 8 GHz
- +29dBm to +22dBm @ 13 GHz BAS

* (Modulation dependent)

RF Band Support*
- 6.425 – 7.125 GHz (FCC TV-BAS)
- 7.100 – 7.900 GHz (ETSI)
- 7.725 – 8.500 GHz (ETSI)
- 12.700 – 13.250 GHz (FCC TV-BAS)

* Consult factory for additional RF band support

Channel Filter Branching Network Assemblies*
- 50 MHz typ. T/T & R/R @ 7 & 13 GHz FCC-BAS
- 75 MHz typ. T/R @ 7 & 13 GHz FCC-BAS
- Waveguide Interface: WR137 @ 7 GHz, WR75 @ 13 GHz

* Consult factory for additional WG interface availability

DATA TRANSPORT PARAMETERS

Modulations
- QPSK, 8PSK, 16 QAM, 32 QAM, 64 QAM, 128 QAM, 256 QAM

Data Throughput Capacity (one-way)
- 10 Mbps to 360 Mbps

Automatic Transmitter Power Control (ATPC)

Adaptive Code Modulation (hitless 0ms)

Encryption
- AES 256

PRIME POWER (MAINS) PARAMETERS

100W (power consumption) switching
- AC (90-132V & 180-264V @ 47 – 63 Hz)

USER INTERFACE PARAMETERS

Ethernet (payload)
- 2 x 100/1000 Base-T, RJ-45
- Gigabit Ethernet line rates scalable up to 360 Mbps
- IPv4 and IPv6
- VLAN 802.1Q
- 64 level DiffServ (DSCP) QoS or 8 level 802.1p in 4 prioritization queues with VLAN support

ASI (payload)
- 4 x ASI simplex transmit (BNC-F)
- 4 x ASI simplex receive (BNC-F)
- 4 x ASI individually configured per direction for duplex (BNC-F)

Hot-Standby ASI Transmit Switch
- 2 x 1 DA

Hot-Standby ASI Receive Switch
- 2 x 1 A/B typ. 40 msec.

Hot-Standby Ethernet TCP/IP Switch
- 600 - 1100 msec.

Local and Remote Link Web-browser Management
- 1 x 100/1000 Base-T (RJ-45)

System Management Interface Parameters
- Hot-Standby and Space Diversity (1+1)
  - 1x DB9 for Alarm Fault switching – RF PA, RSL, etc.

MECHANICAL PARAMETERS

- Weight: 18 lbs. (8.2 kg) (approx)
- 2 RU x 19" (48cm) EIA Rack Mount
- 15.0" depth (38cm) exclusive of filter branching

ENVIRONMENTAL PARAMETERS

Operating to full specifications
- 0 ° to +50° C (32° to 122° F)
- Humidity up to 95% non-condensing

Operational
- -10° to +60° C (14° to 140° F)

Storage
- -40° to +70° C (-40° to +158°F)

REGULATORY PARAMETERS

- FCC Type Certification in accordance with CFR 47 Part, subpart J including:
  - CFR 47, Part 74, subpart J
  - CFR 47, Part 101, subparts C, H and I
- FCC part 15 EMC unintentional emission radiators
- ETSI; EN 301 489-1, 489-28, EN 302 064-1
- Safety per EN/CE EN60950

LICENSE KEY UPGRADES:

- IPLink-365-LIC
  - 200 Mbps to 360 Mbps data throughput license (per non-protected terminal)

RD001881 Rev 2.4
11/02/16 ENG

© 2015 Vislink Group. All rights reserved. All other products or services referenced herein are identified by the trademarks or service marks of their respective companies or organisations. Note: Vislink reserves the right to change specifications without notice. Please contact your representative to confirm current specifications.

VISLINK

IPLink-SM

Split-Mount Indoor/Outdoor Digital Video/Data Microwave Systems

IPLink-SM is a "split-mount" bi-directional point-to-point IP microwave system consisting of a tower mounted RF unit (ODU) and an indoor rack-mounted baseband Ethernet modem (IDU). The ODU is powered via a low loss interconnecting IF coaxial cable for distances up to 1000 feet (300m). Mounting the RF ODU directly to, or in close proximity to the antenna maximizes system gain performance over that of an all-indoor system that incurs the transmission line loss associated with waveguide infrastructures.

The radio system is available for Ethernet only, Ethernet plus ASI or Ethernet plus E1/T1 applications with half-duplex data rates (payload) up to 360 Mbps and in 1+0, 1+1 and 2+0 configurations.

The IPLink-SM supports a wide range of frequency bands between 3.5 and 38 GHz for ETSI and FCC operation and covers channel bandwidths from 3.5 to 56 MHz.

Key Features

- Split-mount, space efficient 1RU x 19" (48cm) rack-mount IDU and tower mounted ODU (IP65 rated)
- Standard & High RF linear broadband RF power outputs
- Automatic Transmitter Power Control
- Adaptive Code Modulation
- User selectable modulations from QPSK to 256 QAM
- High capacity Gigabit Ethernet IP data transport
- Optional high stability ASI or multiple E1/T1 IDU versions
- Intuitive Web-based GUI for monitoring/control

Typical Applications

- Studio-to-Transmitter Links (STL)
- Transmitter-to-Studio Links (TSL)
- Inter-city Relay Backhauls (ICR)
- Multi-hop Microwave Relay Systems
- High-capacity IP Microwave Systems

SPECIFICATIONS

VISLINK

Max Tx Power					
Modulation	Standard/High Tx Power[4], dBm				
	4, U4 GHz	6, 7 GHz	10, 11, 13, 15 GHz	18, 23, 26 GHz	38 GHz
4QAM	+33	+19/+27	+19/+25	+19	+17
16QAM	+32	+18/+26	+18/+24	+18	+16
32QAM	+31	+17/+25	+17/+23	+17	+15
64QAM	+29	+15/+23	+15/+21	+15	+13
128QAM	+29	+15/+23	+15/+21	+15	+13
256QAM	+26	+12/+20	+12/+18	+12	+10

Band	Frequency range	Duplex offset
4 GHz	3.6 – 4.2 GHz	213 MHz, 320 MHz
U4 GHz	4.4 – 5.0 GHz	100 MHz, 300 MHz, 312 MHz
L6 GHz	5.925 – 6.425 GHz	252.04 MHz, 266 MHz
U6 GHz	6.425 – 7.125 GHz	160 MHz, 170 MHz, 200 MHz, 340 MHz
7 GHz	7.110 – 7.900 GHz	154 MHz, 161 MHz, 168 MHz, 196 MHz, 245 MHz
8 GHz	7.725 – 8.5 GHz	119 MHz, 126 MHz, 151.614 MHz, 154 MHz, 160 MHz, 208 MHz, 266 MHz, 300 MHz, 310 MHz, 311.32 MHz, 525 MHz, 550 MHz
10 GHz	10.15 – 10.68 GHz	65 MHz, 91 MHz, 300 MHz, 350 MHz
11 GHz	10.7 – 11.7 GHz	490 MHz, 500 MHz, 530 MHz
13 GHz	12.75 – 13.25 GHz	225 MHz, 266 MHz
15 GHz	14.4 – 15.35 GHz	315 MHz, 322 MHz, 420 MHz, 475 MHz, 490 MHz, 644 MHz, 728 MHz
18 GHz	17.7 – 19.7 GHz	1008 MHz, 1010 MHz, 1560 MHz
23 GHz	21.2 – 23.6 GHz	1008 MHz, 1036 MHz, 1200 MHz, 1232 MHz
26 GHz	24.25 – 27.5 GHz	800 MHz, 1008 MHz
38 GHz	38.6 – 40 GHz	700 MHz, 1260 MHz

CFIP ODU waveguide flange sizes						
4, U4, L6, U6 GHz	7, 8 GHz	10, 11 GHz	13, 15 GHz	18, 23 GHz	26 GHz	38 GHz
N-type	UBR84	UBR100	UBR140	UBR220	UBR260	UBR320

IDU Mechanical & Electrical	
Operational use	Conforms to ETSI EN 300 019 Class 3.1E, IP20, NEMA 1
Temperature Range / Humidity	23°F to +131°F / 5% to 95%
Dimensions: H x W x D / weight	1U (1.77x16.92x9.44 in) / 6.83 lb.
Max. Power Consumption	20-30 W
IDU-ODU connection	Belden 9914/RG-8 cable (300 m), RG213 cable (200 m), Type-N
DC port	-40.5V to -57V DC (conforms to ETSI EN 300 132-2)
Built-in DC and IF port surge protection	Conforms to ETSI EN 301 489-1; EN 61000-4-5; IEC 61000-4-5

ODU Mechanical & Electrical	
Operational use	Conforms to ETSI EN 300 019 Class 4.1, IP65, NEMA 4X
Temperature Range	-27°F to +131°F
Dimensions: H x W x D / weight	11.3x11.3x3.1 in / 7.7 lb.
IF port surge protection	Conforms to ETSI EN 301 489-1; EN 61000-4-5; IEC 61000-4-5
Input DC voltage	-40.5V to -57V DC (conforms to ETSI EN 300 132-2)
Max. Power consumption	SP: 13-27 W; HP: 21-39 W

© 2015 Vislink Group. All rights reserved. All other products or services referenced herein are identified by the trademarks or service marks of their respective companies or organisations. Note: Vislink reserves the right to change specifications without notice. Please contact your representative to confirm current specifications.

MVL-HD2 series

Digital Portable Receiver

H264/MPEG4, MPEG2

A portable digital microwave link, capable of bit rates up to 90Mbit/s and with exceptional RF performance, the MVL-HD2 is a "two-box" radio offering the convenience of Triax remoting. The Receiver features H264 and MPEG2 decoding for High Definition (HD) and Standard Definition (SD) at 4.2.0 and 4.2.2 profiles, with Ultra Low Delay down to 1 frame.

Additionally the receiver features one or two internal decoders (H264/MPEG2 auto selection), by plug in module on the rear panel. Each decoder provides HD/SD SDI and analogue composite video with 4 audios per card offering 2 video plus 8 audios capabilities.
An 2 x ASI output are provided for low loss re-broadcast or extended decoder applications.

The optional RF multiplexer allows two RF carriers via a single antenna.

The receiver uses DVB-S2 demodulation with highly efficient LDPC/BCH FEC or as an option, is switchable to DVB-T COFDM

Frequency bands
1.3 to 13.25GHz

Tuning range
500MHz standard bandwidth (wider bandwidths available to special order)

Frequency selection
Up to 16 pre-set channels or tuning in 1MHz steps via front panel control (500kHz steps available to special order)

Receiver Noise Factor
4dB (nom.)

Demodulation Modes
DVB-S2 QPSK, 8PSK, 16APSK
LDPC/BCH FEC coding 1/4, 1/3, 2/5,,1/2, 3/5, 2/3, 3/4, 4/5, 5/6, 8/9,,9/10

DVB-T QPSK, 16QAM, 64QAM (factory option)
FEC: 1/2, 2/3, 3/4, 5/6, 7/8
Guard interval: 1/32, 1/16, 1/8, 1/4

RF Bandwidth
DVB-S2 - User adjustable in 1kHz steps, with pre-sets for 10, 20, 30MHz.
DVB-T - User selectable 6, 7, 8MHz. (factory option)

Data Rates
DVB-S2 - 4.08 to 89.18Mbit/s
DVB-T - 4.98 to 31.7Mbit/s (option)

Decoding
- MPEG2
- H.264/MPEG4 and MPEG2 with auto selection, (factory option)

Video outputs
SDI HD SMPTE-292M (299M)
SDI SD SMPTE-259M (272M)
Analogue Composite (CVBS) * SD mode only
Down-converted HD to SD CVBS monitor output

Video Formats
1080i: 1920 x 1080, 25 and 29.5Hz
720p: 1280 x 720, 50 and 59Hz
480i (NTSC): 720 x 480
576i (PAL): 720 x 576)

Interface options
Please contact Gigawave Sales Department for other interface options

MVL-HD2 series

Digital Portable Receiver

H264/MPEG4, MPEG2

Audio outputs
- Digital: 2 x stereo SDI embedded (option 4 stereo)
- AES3
- Dolby E and Dolby Digital (AC3) pass through via SDI embedded or AES input
- Analogue: 2 x stereo / 4 x mono (option 8 mono)

Latency
Selection down to 1 frame (30/40ms), H264 or MPEG2

Genlock
Genlock input, composite black/burst or tri-level sync
Genlock timing offset feature, +/- 18,926nS in 37nS steps

User axillary data output
Selectable in the range 1200 to 230,400 baud

ASI input port
Allows decoding of external ASI

70MHz IF Input/Output port.
Available on control unit rear panel

Triax Separation
Up to 600m

Monitoring and Control
• Comprehensive menu selectable via front panel control
• Demodulator / decoder parameters
• Head Unit Alarm
• RF received signal level
• Es/No
• System configuration 10 way store/recall memory
• Unit configuration, status, and internal lock alarms
Remote control via Ethernet and RS232 / RS485

Software upgrade
Via USB port

Power Supply
Universal supply accepts 95 - 130VAC and 190 - 260VAC (auto sensing) plus 12 - 36V DC. Bias ensures no DC consumption when AC is present

Mechanical Interface
Gigawave "Direct Docking" antennas
Tripod, mast, scaffold and special mounts available.

Size
Head Unit: 158 x 142 x 240mm
Control Unit: 2U 19 inch rack mount x 390 mm, with portable carrying handle

Weight
Head Unit: 5.8kg
Control Unit: 6.2kg (configuration dependant)

Environmental
Head Unit:
Ruggedised, Outdoor, Weatherproof
Safe use: -30º to +50ºC
To spec: -20º to +45ºC
Altitude: 4500m

Control Unit:
Safe use: -20º to +50ºC
To spec: -10º to +45ºC
Altitude: 4500m

Gigawave designs and manufactures a wide range of portable products and fixed microwave equipment for television outside broadcasts, electronic news gathering and security applications.

Important Information

Some products are supplied in SD (Standard Definition) only versions. Please contact the Gigawave Sales Team for HD (High Definition) upgrade options.

Specifications may alter at the discretion of Gigawave or to meet customer specific requirements.

Gigawave Limited, Gigawave Technical Centre, Earls Colne Business Park, Colchester, Essex CO6 2NS, UK.
Tel: +44 (0)1787 223300 Fax: +44 (0)1787 222002 Email sales@gigawave.co.uk www.gigawave.co.uk

MVL-HD2 series

Digital Portable Transmitter

H264/MPEG4, MPEG2

A portable digital microwave link, capable of bit rates up to 90Mbit/s and with exceptional RF performance, the MVL-HD2 is a "two-box" radio offering the convenience of Triax remoting. The transmitter features H264 or MPEG2 coding for High Definition (HD) and Standard Definition (SD) at 4.2.0 and 4.2.2 profiles, with Ultra Low Delay down to 1 frame.

Additionally the transmitter features one or two internal MPEG encoders (HD/SD switchable), by plug in module on the rear panel. Each encoder accepts HD/SD SDI and analogue composite video with 4 audios per card, resulting in 2 video, 8 audio capability. An Internal ASI multiplexer enables multiple videos to be transmitted on a single RF carrier. Additionally a separate plug in 4 input, or 5 input, ASI mux module is optionally available.

An optional RF multiplexer allows two RF carriers via a single antenna (T/T or T/R).

The transmitter uses DVB-S2 modulation with highly efficient LDPC/BCH FEC coding, or as an option is switchable to DVB-T COFDM.

Frequency bands
1.3 to 13.25GHz (other frequency bands to special order)

Tuning range
500MHz standard bandwidth (wider bandwidths available to special order)

Frequency selection
Up to 16 pre-set channels or tuning in 1MHz steps via front panel control (500kHz steps available to special order)

TX power
1 Watt 1.3 to 10GHz
500mW 11 to 13GHz

Modulation Modes
DVB-S2 QPSK, 8PSK, 16APSK
LDPC/BCH FEC coding 1/4, 1/3, 2/5,,1/2, 3/5, 2/3, 3/4, 4/5, 5/6, 8/9,,9/10

DVB-T QPSK, 16QAM, 64QAM (factory option)
FEC: 1/2, 2/3, 3/4, 5/6, 7/8
Guard interval: 1/32, 1/16, 1/8, 1/4

RF Bandwidth
DVB-S2 - User adjustable in 1kHz steps, with pre-sets for 10, 20, 30MHz.
DVB-T - User selectable 6, 7, 8MHz.

Data Rates
DVB-S2 - 4.08 to 89.18Mbit/s
DVB-T - 4.98 to 31.7Mbit/s

Encoding
Factory options:
- MPEG2 SD/HD
- H.264/MPEG4,

Video inputs
SDI HD SMPTE-292M (299M)
SDI SD SMPTE-259M (272M)
Analogue Composite (CVBS)

Video Formats
1080i: 1920 x 1080, 25 and 29.5Hz
720p: 1280 x 720, 50 and 59Hz
480i (NTSC): 720 x 480
576i (PAL): 720 x 576)

ASI input / output interfaces and ASI muxing
- Direct ASI input, plus internal ASI MUX to combine, optionally, two internal MPEG encoders and an external ASI input.
- ASI mux output port
- 4 input, or 5 input, plug in ASI mux module (option)

MVL-HD2 series

Digital Portable Transmitter

H264/MPEG4, MPEG2

Audio inputs
- Digital: 2 x stereo SDI embedded (option 4 stereo)
- AES3
- Dolby E and Dolby Digital (AC3) pass through via SDI embedded or AES input
- Analogue: 2 x stereo / 4 x mono (option 8 mono)

Latency
Selection down to 1 frame (30/40ms), H264 or MPEG2

Internal test signals
Colour bars with travelling ID, and audio tones

User axillary data input
Selectable in the range 1200 to 230,400 baud

70MHz IF Input/Output port.
Available on control unit rear panel

Triax Separation
Up to 600m

Monitoring and Control
• Comprehensive menu selectable via front panel control
• Modulator / encoder parameters
• Head Unit Alarm
• RF output Level
• Video and audio test signals
• System configuration 10 way store/recall memory
• Unit configuration, status, and internal lock alarms
Remote control via Ethernet and RS232 / RS485

Software upgrade
Via USB port

Power Supply
Universal supply accepts 95 - 130VAC and 190 - 260VAC (auto sensing) plus 12 - 36V DC. Bias ensures no DC consumption when AC is present

Mechanical Interface
Gigawave "Direct Docking" antennas
Tripod, mast, scaffold and special mounts available.

Size
Head Unit: 158 x 142 x 240mm
Control Unit: 2U 19 inch rack mount x 390 mm, with portable carrying handle

Weight
Head Unit: 5.8kg
Control Unit: 6.2kg (configuration dependant)

Environmental
Head Unit:
Ruggedised, Outdoor, Weatherproof
Safe use: -30º to +50ºC
To spec: -20º to +45ºC
Altitude: 4500m

Control Unit:
Safe use: -20º to +50ºC
To spec: -10º to +45ºC
Altitude: 4500m

Gigawave designs and manufactures a wide range of portable products and fixed microwave equipment for television outside broadcasts, electronic news gathering and security applications.

Important Information

Some products are supplied in SD (Standard Definition) only versions. Please contact the Gigawave Sales Team for HD (High Definition) upgrade options.

Specifications may alter at the discretion of Gigawave or to meet customer specific requirements.

Gigawave Limited, Gigawave Technical Centre, Earls Colne Business Park, Colchester, Essex CO6 2NS, UK.
Tel: +44 (0)1787 223300 Fax: +44 (0)1787 222002 Email sales@gigawave.co.uk www.gigawave.co.uk

MVL-HD2 (5U) Series

Digital Portable Receiver

The MVL-HD2 is a portable, two box, digital microwave link with exceptional RF performance, offering the convenience of Triax remoting. With automatic selection between SD and HD, the receiver provides comprehensive signal outputs including SD/HD SDI, Analogue Composite and Component video, ASI, 4 digital and analogue audios and SDI embedded audio.

Frequency Band
1.3 - 13.8GHz band (other bands available to special order)

Tuning Range
300MHz standard bandwidth (wider bandwidths available to special order)

Frequency Selection
Up to 16 pre-set channels or tuning in 1MHz steps via front panel control (500kHz steps available to special order)

Receiver Noise Factor
4dB (nom.)

Receiver Threshold
-92dBm to BER 10-5 (nom., QPSK)

Receive Antenna
Interface with the complete range of Gigawave antennas

Modulation
COFDM DVB-T 2k

Demodulation Modes
QPSK, 16QAM, 64QAM
FEC: 1/2 2/3 3/4 5/6 7/8
Guard interval: 1/32 1/16 1/8 1/4

Data Rate
4.98 to 31.7 Mbit/s

Bandwidth
6, 7 or 8MHz

Decoding Options
MPEG 2 4:2:0/4:2:2 high quality video (DVB standard)

Latency
Selectable to less than 2 frames, Tx-Rx

Video Output
SDI HD SMPTE-292M (299M) (qty 2)
SDI SD SMPTE-259M (272M)
Analogue Composite (PAL/NTSC) (qty 2)
Component Y/C

Genlock
Reference auto selection, PAL/NTSC or Tri-level sync

ASI Output
188/204/byte selectable (qty 2)

Data Output
Auxiliary user data RS232

Audio Output
Digital: 2 x AES3 outputs plus SDI embedded
Analogue: 2 x stereo / 4 x mono outputs

IF Frequencies
1st IF - 70MHz
2nd IF - In the range 600-1500MHz

Encoding Options
MPEG 2 4:2:0/4:2:2 high quality video (DVB standard)

Interface Options
Please contact Gigawave Sales Department for other interface options.

MVL-HD2 (5U) Series
Digital Portable Receiver

IF Input/Output
Available on Control Units and via triax interface on Head Units.

Triax Separation
Up to 600m

Monitoring (Rx Control)
- Menu selectable via front panel control
- COFDM demodulator / MPEG 2 decoder parameters
- Head Unit Alarm
- RF Received signal level
- CSI
- BER
- Summary front panel alarm / comprehensive internal lock alarms

Power Supply
Universal supply accepts 95 - 130VAC and 190 - 260VAC (auto sensing) plus 12 - 36V DC. Bias ensures no DC consumption when AC is present

Mechanical Interface
Tripod, mast, scaffold and special mounts available.

Size
Head Unit: 158 x 142 x 240mm
Control Unit: 182 x 142 x 250mm

Weight
Head Unit: 5.8kg
Control Unit: 7.6kg

Environmental
Head Unit:
Safe use: -30° to +50°C
To spec: -20° to +45°C
Altitude: 4500m
Humidity: 95% long term

Control Unit:
Safe use: -20° to +50°C
To spec: -10° to +45°C
Altitude: 4500m
Humidity: 95% long term

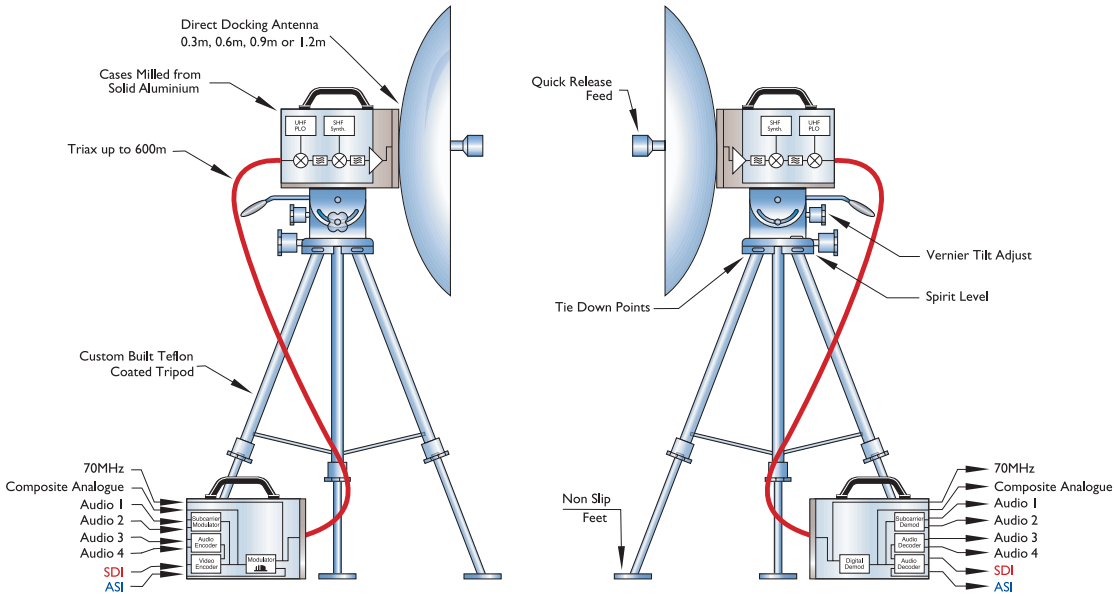

Transmit Terminal

Receive Terminal

Gigawave designs and manufactures a wide range of portable and fixed microwave equipment for television outside broadcasts, electronic newsgathering and security applications.

Important Information:

Some products are supplied in SD (Standard Definition) only versions. Please contact the Gigawave Sales Team for HD (High Definition) upgrade options.

Specifications may alter at the discretion of Gigawave or to meet customer specific requirements.

Gigawave Limited, Gigawave Head Office, Earls Colne Business Park, Colchester, Essex CO6 2NS. UK.
Tel: +44 (0)1787 223300 Fax: +44 (0)1787 222002 Email: sales@gigawave.co.uk www.gigawave.co.uk

MVL-HD2 (5U) Series

Digital Portable Transmitter

Switchable SD/HD, the MVL-HD2 is a portable, two box, digital microwave link; with exceptional RF performance, offering the convenience of Triax remoting. The transmitter provides comprehensive signal inputs including SD/HD SDI, Analogue Composite and Component video, ASI, 4 digital and analogue audios and SDI embedded.

Frequency Band
1.3 - 13.8GHz band (other bands available to special order)

Tuning Range
300MHz standard bandwidth (wider bandwidths available to special order)

Frequency Selection
Up to 16 pre-set channels or tuning in 1MHz steps via front panel control (500kHz steps available to special order)

Transmit Power
0.5W or 1W subject to RF band required

Transmit Antenna
Interface with the complete range of Gigawave antennas

Modulation
COFDM DVB-T 2k

Modulation Modes
QPSK, 16QAM, 64QAM
FEC: 1/2 2/3 3/4 5/6 7/8
Guard interval: 1/32 1/16 1/8 1/4

Data Rate
4.98 to 31.7 Mbit/s

Bandwidth
6, 7 or 8MHz

Encoding Options
MPEG 2 4:2:0/4:2:2 high quality video (DVB standard)

Latency
Selectable to less than 2 frames, Tx-Rx

Video Input
SDI HD SMPTE-292M (299M)
SDI SD SMPTE-259M (272M)
Analogue Composite (PAL/NTSC)
Component Y,U,V or Y/C

Internal Test Signals
525/625 colour bars, audio test tones

ASI Input
ASI transport stream, 188/204/byte automatic selection

Data Input
Auxiliary user data RS232

Audio Input
Digital: 2 x AES3 inputs, SDI embedded
Analogue: 2 x stereo / 4 x mono inputs, mic/line selectable

IF Frequencies
1st IF - 70MHz
2nd IF - In the range 600-1500MHz

Interface Options
Please contact Gigawave Sales Department for other interface options.

MVL-HD2 (5U) Series
Digital Portable Transmitter

IF Input/Output
Available on Control Units and via triax interface on Head Units.

Triax Separation
Up to 600m

Monitoring (Tx Control)
- Menu selectable via front panel control
- Power on / standby present
- MPEG 2 encoder / COFDM modulator parameters
- Head Unit Alarm
- RF output level
- Video present
- Test Signals
- Summary front panel alarm / comprehensive internal lock alarms

Power Supply
Universal supply accepts 95 - 130VAC and 190 - 260VAC (auto sensing) plus 12 - 36V DC. Bias ensures no DC consumption when AC is present

Mechanical Interface
Tripod, mast, scaffold and special mounts available.

Size
Head Unit: 158 x 142 x 240mm
Control Unit: 182 x 142 x 250mm

Weight
Head Unit: 6.5kg
Control Unit: 7.9kg

Environmental
Head Unit:
Safe use: -30° to +50°C
To spec: -20° to +45°C
Altitude: 4500m
Humidity: 95% long term

Control Unit:
Safe use: -20° to +50°C
To spec: -10° to +45°C
Altitude: 4500m
Humidity: 95% long term

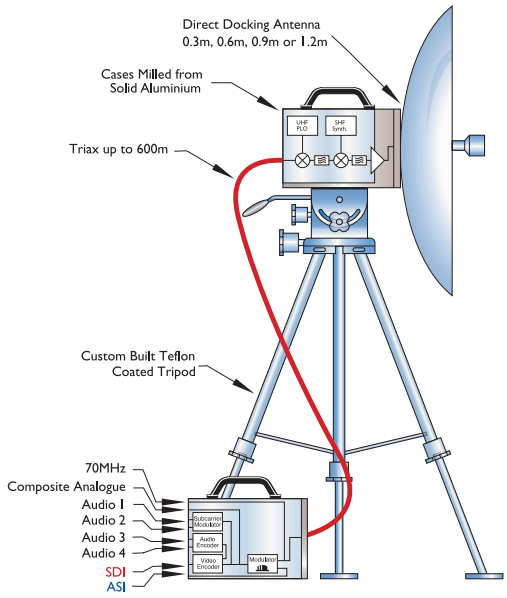

Transmit Terminal

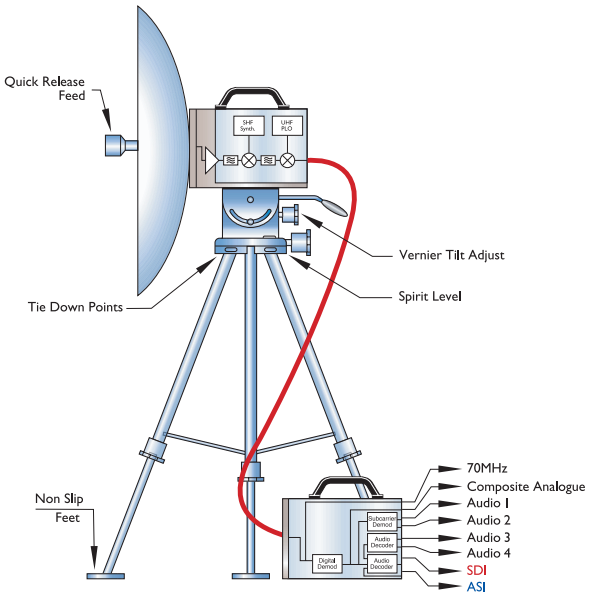

Receive Terminal

Gigawave designs and manufactures a wide range of portable and fixed microwave equipment for television outside broadcasts, electronic newsgathering and security applications.

Important Information:

Some products are supplied in SD (Standard Definition) only versions. Please contact the Gigawave Sales Team for HD (High Definition) upgrade options.

Specifications may alter at the discretion of Gigawave or to meet customer specific requirements.

Gigawave Limited, Gigawave Head Office, Earls Colne Business Park, Colchester, Essex CO6 2NS. UK.
Tel: +44 (0)1787 223300 Fax: +44 (0)1787 222002 Email: sales@gigawave.co.uk www.gigawave.co.uk

2A20SS / 7A30SS

Solid State Feed Transmit Antenna

The 2A20SS/7A30SS is a low-profile, offset-fed antenna that is ideally suited for many broadcast microwave van applications. The reflector is constructed from honeycomb/fiberglass material that provides extreme ruggedness and light weight.

It is available as a single band antenna covering 2 GHz (2.0 to 2.7 GHz) or 7 GHz (6.4 to 7.4 GHz) bands, or as a multiband antenna system covering both the 2 and 7 GHz bands.

The feed design permits choices of linear or circular polarization with standard quad polarization models at 2 GHz, 7 GHz, or 2/7 GHz.

This antenna offers:

- Gain of:
  - 20 dBi @ 2 GHz
  - 30 dBi @ 7 GHz
- RF switching performed through the latest advancements in solid-state technology – no electro-mechanical switches

- High reliability, lower cost of ownership, less down time than electro-mechanical switch designs
- Dramatically lower DC operating power
- Quad polarization standard

Key Features

- Smaller, lighter weight feed design
- Excellent front-to-back and sidelobe performance
- Low-profile, offset-fed design
- High degree of integration through the use of custom integrated modules

Typical Applications

- Electronic Newsgathering

SPECIFICATIONS

VISLINK

GENERAL

Antenna Type
- Offset Fed Parabola

Model
- 2 GHz; 7 GHz

Operating Frequency
- 2.0 to 2.7 GHz
- 6.4 to 7.4 GHz

Gain, nominal*
- 20 dBi; 30 dBi
- Beamwidth (Typical) –3 dB

** Gain is for basic antenna, net of switching options*

Azimuth:
- 14.2°; 4.2°

Elevation:
- 19.5°; 6.8°

F/B Ratio:
- –25 dB min / –22 dB min

Side Lobe Rejection:
- –20 dB / –20 dB

MECHANICAL CHARACTERISTICS

Construction:
- Fiberglass, Honeycomb Construction

Reflector:
- 19"h x 31"w (48 x 79 cm)

Weight:
- 15 lbs (6.75 kg)

Temperature Range:
- –30°C to +60°C

CONFIGURATIONS

- 2 GHz Quad Pole
- 7 GHz Quad Pole
- 2/7 Dual Band Quad Pole, Simultaneous Switching, TX

OPTIONS

- 24 Vdc Power Supply with Polarity Switch (Rack Mount)

Reflector Size - 19" x 31"

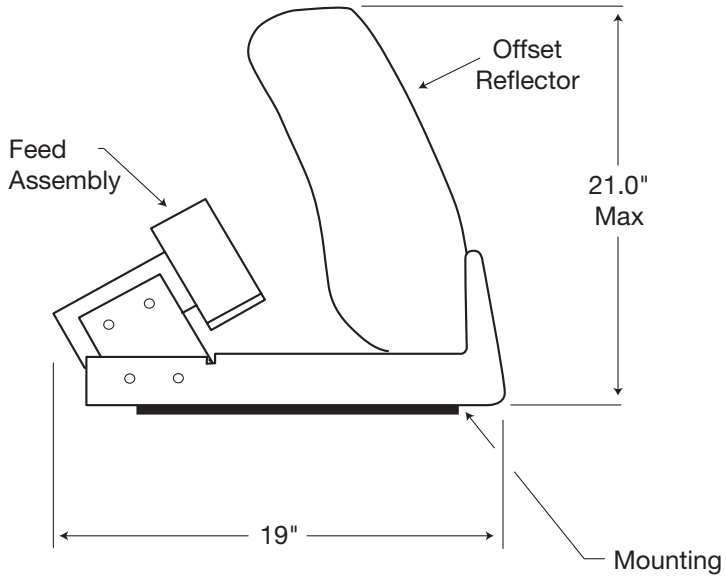

01/15 ENG
RD001732 Rev 1

© 2014 Vislink Group. All rights reserved. All other products or services referenced herein are identified by the trademarks or service marks of their respective companies or organisations. Note: Vislink reserves the right to change specifications without notice. Please contact your representative to confirm current specifications.

DXL5000 Series

Long-Haul Radio

OVERVIEW

The DXL5000 is a compact high performance, digital microwave system designed for STL, ATSC, ISDB-T, inner city relay, statewide networks, and other point-to-point applications. The digital platform provides highly reliable long-term operation. Combined with a user-friendly, web-based command, control, and diagnostic interface, the DXL5000 radio is loaded with features that simplify installation, optimization, and monitoring.

The system can be equipped with up to four user definable transport tributaries fed from a variety of interface connectors. Available interface types include three 75 BNCs, four RJ-45s, and a serial port. All coaxial inputs can be configured as ASI or DS3/E3, with one having the capability of SMPTE310. The selection is made via an intuitive web based GUI. One of the RJ45s is for 10/100 Ethernet Data traffic through the link, two support T1/E1 traffic, and one is dedicated to web browser management. An integrated multiplexer combines all signals for transport. A wayside serial port is available for additional service channel needs.

The advanced digital modulator includes adjustable Viterbi error correction to provide ultra-robust performance under adverse path conditions, and the adaptive equalizer in the receiver automatically compensates for multipath. The DLX5000 systems web based set-up software allows a user to optimize transmission parameters for the most efficient spectral use of the authorized channel balanced against path conditions.

All of the operating parameters are monitored by an on board processor that immediately reports alarm conditions through either the web interface, or relay contacts. The same web GUI may be used to set-up and change the radio configuration using a browser connected via ethernet. Alarms may be customized to suit user preferences. Critical signal error conditions can be designated as major alarms while non-critical errors can be designated as alerts.

Each DXL5000 transmitter or receiver is completely self contained in a single rack unit chassis that includes digital baseband processing, RF subsystems, shelf processor, and a power supply. Available configurations include: simplex or duplex, non-protected, hot-standby protected, space diversity receiver, terminals, with models from 6 to 13 GHz.

Digital Video/Data Microwave System

BENEFITS

- High Performance Digital STL/ICR/Backbone, ATSC, ISDB-T
- Integrated Multiplexer / Modem
- ASI, SMPTE 310M, DS3/E3, T1/E1 ISDB-T BTS
- Non-protected and Hot-Standby terminals
- Compatible with DXL8000
- 10/100 Ethernet traffic support
- Wayside serial data
- Powerful Viterbi error correction
- Highly effective multipath equalizer

CONFIGURATIONS

- Simplex
- Duplex
- Non-protected
- Hot-Standby Tx, Rx, Duplex
- Space Diversity Rx

Key Features

- Send up to 3 ASI Signals Simultaneously
- Part 74 FCC Compliant
- Easy to Use Web Browser Monitor & Control
- Fully Enabled Out of the Box (no additional licenses to purchase)
- Duplex Mode Enables High-Speed Ethernet

Typical Applications

- Fixed Point-to-Point Microwave
- Studio to Transmitter Link
- Inner City Relay
- Statewide Systems
- Medium to Long Range Transmission

SPECIFICATIONS

VISLINK

GENERAL

Modulation Capability:
- QPSK, 16QAM, 32QAM 64QAM

Data Rates:
- Up to 110 Mbps in 25 MHz Channel
- 155 Mbps in 30 MHz Channel
- 178 Mbps in a 40 MHz channel

Symbol rate range:
- 1 to 20 Mbps (standard)
- 1 to 33 Msps (optional)

ASI, ATSC, ISDB-T, DVB-T
- Impedance: 75 Ω Unbalanced, ± 5%
- Data Rate: Any transport stream rate up to 105 Mbps
- MPEG Support: 188 byte or 204 byte packets, auto detection
- Standards Compliance: DVB-ASI per EN 50083-9

SMPTE 310M, ATSC, ATSC-H
- Impedance: 75 Ω Unbalanced, ± 5%
- Data Format: Biphase Mark Coding
- Clock Rate: 19.39265 Mbps, ± 2.8 ppm
- Data Rate: 19.39265 Mbps (same as clock rate)
- Standards Compliance: SMPTE 310M

T1/E1
- Impedance: 100 Ω nominal, Balanced, ± 5%
- Line Rate T1: 1.544 Mbps ±32 ppm
- Line Rate E1: 2.048 Mb/s ±32 ppm
- Line Coding T1: AMI or B8ZS (user selectable, each channel)
- Line Coding E1: AMI or HDB3 (user selectable, each channel)

DS3:
- Impedance: 75 Ω, unbalanced
- Line Rate: 44.736 Mbps, ± 20 ppm
- Line Coding: B3ZS

E3:
- Impedance: 75 Ω unbalanced
- Line Rate: 34.368 Mb/s +/-20 ppm
- Line Coding: HDB3

10/100 BaseT:
- Protocol: User Programmable HDLC & LAPS mapping
- Interface Rate: 10/100 BaseT limited to ASI rate setting
- Standards Compliance
  - IEEE 802.3-2002, RFC1662
  - RFC2615, X.86, RMII

CONTROL AND ALARMS

Web Browser Management Interface:
- 10 BaseT (Web Browser)

Summary Alarm/Alert:
- Two independent Form C relay (closures via DB-9 connector on rear panel)

POWER & POWER CONSUMPTION
- AC input: 90 to 132V & 180 to 264V at 47 to 63 Hz
- Line & load regulation:
  - ±2% over AC input range
  - and 0 to 100% load change.
- DC input: ± 24Vdc, ± 48Vdc
- Transmitter: 130 W Max.
- Receiver: 60 W Max.

ENVIRONMENTAL

Operating to full specifications:
- 0° to +50° C [32° to 122° F]
- Humidity up to 95% non-condensing

Operational:
- –10° to +60° C [14° to 140° F]

Storage:
- –40° to +70° C [–40° to 158° F]

PHYSICAL

Mounting:
- 19" EIA Rack Mount

Height:
- 1RU

Depth with Branching:
- 12.7"

Depth without Branching:
- 16.75"

RF PERFORMANCE

Model	RF Bands	Power O/P* (dBm)	Rx Sens** (dBm)	Stability
DXL5000 2 GHz Rx	2.0 to 2.7 GHz		-80	0.0005%
DXL5000 2 GHz Tx	2.3 to 2.7 GHz	+31		0.0005%
DXL5000 2 GHz Tx	2.0 to 2.11 GHz & 2.45 to 2.5 GHz	+31		0.0005%
DXL5000 6 GHz	5.9 to 7.1 GHz	+28	–80	0.0005%
DXL5000 6 GHz HiPwr	5.9 to 7.1 GHz	+33	–80	0.0005%
DXL5000 7 GHz	7.6 to 8.5 GHz	+31	–80	0.0005%
DXL5000 12 GHz	10.5 to 13.25	+27	–79	0.0005%

* O/P power reference is 16QAM, measured prior to branching.
** Rx Threshold referenced to 10^{-6} BER in 16QAM mode, measured at the channel filter input
Note: RF output and receiver threshold vary in relationship to symbol rate and modulation constellation.

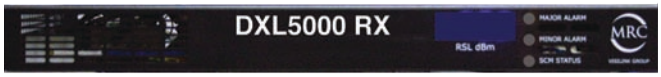

DXL Receiver Front Panel Controls

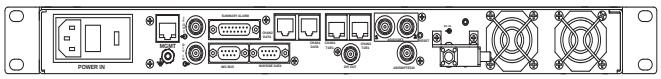
DXL Receiver Rear Panel Connections

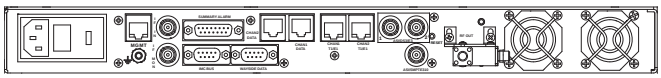
DXL Transmitter Rear Panel Connections

© 2014 Vislink Group. All rights reserved. All other products or services referenced herein are identified by the trademarks or service marks of their respective companies or organisations. Note: Vislink reserves the right to change specifications without notice. Please contact your representative to confirm current specifications.

10/14 ENG
RD001235 Rev 3

VISLINK

DXL8000

High Performance Short Haul Radio

High Performance 6 to 23 GHz Short Haul Radios

OVERVIEW

The DXL8000 6 to 23 GHz Short Haul Radio is a compact, high performance, split mount digital duplex microwave radio designed for Studio to Transmitter, Transmitter to Studio and "last mile" point to point applications. The DXL8000 delivers aggregate data rates up to 170 Mbps at 64QAM modulation.

The DXL8000 supports from 1 – 4 independent, user selectable transport streams, and includes Web Browser Management Interface to optimize transmission parameters for maximum spectral efficiency. Transport stream options include ASI, SMPTE 310M, in support of ATSC, DVB-T, ISDB-T BTS and DS3 / E3, 100BaseTX Ethernet, and T1/E1. The advanced digital modulator includes Viterbi error correction for ultra-robust performance under adverse path conditions, while the adaptive equalizer at the receiver automatically compensates for multipath errors.

The DXL8000 is built for easy installation, setup, and management. The split mount design enables the use of economical coaxial interconnects between the Indoor Unit and the rooftop or tower mounted Outdoor Unit. The radio's advanced control processor with embedded web server provides a rich set of control and configuration options both locally, and remotely, over a secure IP connection.

All operating parameters are monitored by the control processor which immediately reports alarm conditions via the graphical interface and relay contacts. Alarms may be customized to suit user preferences, and a wayside serial port is included for service channel support.

The DXL8000 Short Haul Radio delivers industry leading throughput performance, an extensive range of interface options and advanced configuration and control to meet broadcasters' present requirements and future growth plans.

FEATURES

- High Performance
  - Up to 170 Mbps throughput
  - Integrated Multiplexer & Modulator
  - Duplex and Simplex configurations
- Multiple Transport Streams
  - ATSC, DVB-T, ISDB-T BTS
  - SMPTE 310M, ASI
  - 10/100 Ethernet
  - Telco DS3/E3 and T1/E1
- Advanced Management functionality
  - Browser based local and remote configuration/ monitoring
  - Firmware upgrades in the field
  - Embedded Wayside data channel
- Designed for Reliability
  - Transmitter provides ultrarobust performance under adverse path conditions
  - Receiver automatically compensates for multi-path errors
  - Versatile 1 RU split mount design configurations
- IF Only option for use with external 70 MHz modems
- ANSI and ETSI Versions

Key Features

- Send up to 3 ASI Signals Simultaneously
- Part 74 FCC Compliant
- Easy to Use Web Browser Monitor & Control
- Fully Enabled Out of the Box (no additional licenses to purchase)
- Duplex Mode Enables High-Speed Ethernet

Typical Applications

- "Last Mile" Point-to-Point Microwave
- Studio to Transmitter Link
- Short to Medium Range Transmission

SPECIFICATIONS

VISLINK

GENERAL

Frequency Range (GHz)

- 5.9 to 6.4
- 6.4 to 7.1
- 7.1 to 7.9
- 7.9 to 8.5
- 10.7 to 11.7
- 12.7 to 13.25
- 17.7 to 19.7
- 21.2 to 23.6

Channel Bandwidths:

- 10, 20, 30, & 40 MHz

Modulation:

- QPSK, 16QAM, 32QAM, 64 QAM

Data Rates:

- Up to 45 Mbps in 10 MHz (Std)
- Up to 90 Mbps in 20 MHz (Std)
- Up to 135 Mbps in 30 MHz (optional)
- Up to 170 Mbps in 40 MHz (optional)

Symbol rate range:

- 1 to 20 Mbps (standard)
- 1 to 33 Msps (optional)

USER DEFINABLE SIGNAL INTERFACE OPTIONS

ASI, ATSC, ATSC-H, ISDB-T

- Impedance: 75 Ω Unbalanced, ± 5%
- Data Rate: Any transport stream rate up to 90 Mbps
- MPEG Support: 188 byte Auto Detection or 204 byte packets
- Standards Compliance:: DVB-ASI per EN 50083-9

SMPTE 310M, ATSC, ATSC-H

- Impedance: 75 Ω Unbalanced, ± 5%
- Data Format: Biphase Mark Coding
- Clock Rate: 19.39265 Mbps, ± 2.8 ppm
- Data Rate: 19.39265 Mbps (same as clock rate)
- Standards Compliance: SMPTE 310M

T1/E1:

- Impedance: 100 Ω Balanced, ± 5%
- Line Rate T1: 1.544 Mbps ±32 ppm
- Line Rate E1: 2.048 Mb/s ± 32 ppm
- Line Coding: T1AMI or B8ZS (user selectable, each channel)
- Line Coding E1: AMI or HDB3 (user selectable, each channel)

DS3:

- Impedance: 75 Ω unbalanced, ± 5%
- Line Rate: 44.736 Mbps, ± 20 ppm
- Line Coding: B3ZS

E3:

- Impedance: 75 Ω unbalanced, ± 5%
- Line Rate: 34.368 Mb/s ± 20 ppm
- Line Coding: HDB3

10/100BaseT:

- Protocol: User Programmable HDLC and LAPS mapping

Interface Rate:

- 10/100 BaseT limited to ASI rate setting

POWER & POWER CONSUMPTION

- 90-132V and 180-264V at 47-63 Hz
- Consumption: 120 W Max.
- Line & load regulation: ± 2% over AC input range and 0 to 100% load change.

ENVIRONMENTAL:

- ODU Operational: –22° to +131° F [–30° to +55° C] (Cold start at –45° C [–49° F])
- IDU Operational: 0° to +50° C [32° to +122° F]

PHYSICAL

IDU:

- Weight: 7.6 lbs [3.45 kg]
- Dimensions:
  - 1 RU 19" EIA Rack Mount
  - 15.5" Deep (from mounting brackets)

ODU:

- Weight: 10.1 lbs [4.6 kg]
- Dimensions:
  - 10.5" Dia x 3.5" Depth [26.7 cm x 8.9 cm]

IDU/ODU INTERFACE

- Interconnecting Cable: 850 ft. Max
- Connector Type: Type N (both ends)
- Cable Type: LDF4-50A, LMR-400 or equivalent

IF ONLY OPTION

(EXTERNAL MODEM REQUIRED)

- Input/Output Frequency: 70 MHz
- IF Levels: –10 dBm nominal

STANDARDS COMPLIANCE:

- IEEE 802.3-2002, RFC1662, RFC2615, X.86, RMII

MANAGER INTERFACE

- 10 BaseT (Web browser)

SUMMARY ALARM/ALERT:

- Two independent Form C relay closures via DB-9 connector on rear panel.

RF PERFORMANCE

RF Band (GHz)	Regulatory Standard	Frequency Tolerance	Channel B/W MHz	Duplex T/R Spacing MHz	Typ RF O/P QPSK dBm	TypRF O/P 16QAM dBm	TypRF O/P 32QAM dBm	Typ RF O/P 64QAM dBm	Rx Threshold 16QAM	Typical Noise Figure
5.9 to 6.4	FCC Part 101	0.001	30	252.04	30	28		24	–76	<2.5
6.4 to 7.1 **	ETSI Plan	0.001	7, 14, 28, 40	340	30	30		24	–76	<2.5
7.1 to 7.9	*ETSI	0.001	7, 14, 28, 40	154, 160, 161, 168, 196, 245	30	28	28	24	-77	<3.0
7.9 to 8.5	*ETSI	0.001	7, 14, 28, 40	154, 160, 161 168, 196, 245	30	28	28	24	-77	<3.0
10.7 to 11.7	FCC Part 101	0.001	30, 40	490/500	28	26		21	–77	<3.0
12.7 to 13.25	FCC Parts 74 and 101	.001	10, 20, 30, 40	266	26	23	23	18	-77	<3.0
17.7 to 19.70	FCC Parts 74 & 101	0.001	10, 20, *30, 40	1560	25	22		17	–77	<6.0
21.2 to 23.6	FCC Part 101	0.001	10, 20, 30, 40	1200	25	22		17	–76	<6.0

* Part 101 only; 30 MHz channels not available in Part 74 FCC at 18 GHz
** ETSI –Export applications only, not available in US

DATA RATES

Channel B/W MHz	Max Symbol Rate Msps	Max Baseband Data Rate - Mbps				FCC Emission Designator
		QPSK	16QAM	32QAM	64QAM	
7	5.7	11.0	22.0	28.0	N/A	N/A
10	8.2	14.8	29.9	37.3	N/A	10M0D7W
14	11.5	22.0	44.0	56.0	N/A	N/A
20	16.4	29.5	59.8	74.6	N/A	20M0D7W
28	23.0	44.0	89.0	112.0	132.0	N/A
30	24.6	44.3	89.7	111.9	134.0	30M0D7W
40	32.8	59.0	119.6	149.2	178.6	40M0D7W

Note: All specifications subject to change without notice.

AVAILABLE ANTENNAS

Model*	Band (GHz)	Diameter	Gain	FCC Category	ETSI Category
HP6-59R**	5.9 - 6.4	6(1.8 M)	39.0	A	300883 R1 C2
HP6-64R**	6.4 - 7.1	6(1.8 M)	39.1	A	300883 R1 C2
HP2-7	7.1 - 7.8	2' (60)	30.7		300883 R1 C2
HP3-7		3' (90)	33.9		300883 R1 C2
HP4-7		4' (120)	36.3		300883 R1 C2
HP6-7		6' (180)	39.9		300883 R1 C2
HP2-77*	7.75 - 8.5	2' (60)	31		300883 R1 C2
HP3-77*		3' (90)	34.5		300883 R1 C2
HP4-77*		4' (120)	37		300883 R1 C2
HP6-77*		6' (180)	40.3		300883 R1 32
HP2-11R	10.7 - 11.7	2 (0.6 M)	33.4	B	300883 R1 C2
HP3-11R		3 (0.9 M)	36.9	B	300883 R1 C3
HP4-11R		4 (1.2 M)	39.4	A	300883 R1 C2
HP6-11R		6 (1.8 M)	42.5	A	300883 R1 C2
HP2-13R	12.7 - 13.25	2 (0.6M)	35.9		300833 R1 C2
HP3-13R		3 (0.9M)	38.7		300833 R1 C2
HP4-13R		4 (1.2M)	41.9	B	300833 R1 C2
HP6-13R		6 (1.8M)	44.4	A	300833 R1 C3
HP2-18R	17.7 - 19.7	2 (0.6 M)	38.6	A	300883 R2 C3
HP3-18R		3 (0.9 M)	42.0	A	300883 R2 C3
HP4-18R		4 (1.2 M)	44.5	A	300883 R2 C3
HP6-18R		6 (1.8 M)	48.0	A	300883 R2 C2
HP2-23R	21.2 - 23.6	2 (0.6 M)	40.2	A	300883 R2 C3
HP3-23R		3 (0.9 M)	43.7	A	300883 R2 C3
HP4-23R		4 (1.2 M)	46.2	A	300883 R2 C3
HP6-23R		6 (1.8 M)	49.2	A	300883 R2 C2

Notes: * All antennas include snap mount for ODU
** 5.9 – 6.4 & 6.4 – 7.1 GHz antennas are rectangular W/G feed. All others are circular interface.

© 2014 Vislink Group. All rights reserved. All other products or services referenced herein are identified by the trademarks or service marks of their respective companies or organisations. Note: Vislink reserves the right to change specifications without notice. Please contact your representative to confirm current specifications.

10/14 ENG
RD001087 Rev 2

VISLINK

STRATA

Portable Microwave Link System

OVERVIEW

STRATA's modular design removes the constraints of traditional portable radios giving you the ultimate flexibility in deploying a microwave link. The field proven system can easily be swapped between mobile, airborne, or fixed applications depending on where they're most needed.

STRATA's versatility lets you adapt quickly to any situation whether it is simplex, duplex, or a multi-hop link. Transmitters and receivers can be configured for analog, digital, or switchable analog/digital.

Vislink offers system designs to meet your requirements, including 1 Box, 2 Box, Split Box and Duplex and Diplex Systems.

The STRATA system is scalable, making it a cost effective investment for your immediate as well as future needs, allowing you to build and expand your system, as needed.

ANTENNAS

Vislink offers a wide range of antennas to fit any STRATA system configuration, including omnidirectional antennas for mobile and airborne applications, and parabolic and MegaHorn antennas for fixed or portable links.

Features

- Easy Installation for Tripod, Airborne, or Vehicle
- Weatherized, Lightweight Rugged Design
- Cost Effective Modular Solutions
- Multiple configuration types: Simplex, Half Duplex, Full Duplex, or Diplex Configurations
- Front Panel or Remote Control

Applications

- Outside Broadcast
- Portable ENG Newsgathering
- Mobile Applications
- Airborne Applications

SPECIFICATIONS

VISLINK

	2 GHz TXU	2 GHz HPU (Optional)	7 GHz TXU	7 GHz HPU (Optional)	13 GHz TXU	13 GHz HPU (Optional)
Power Output	+29 dBm	+38 dBm	+31 dBm	+37dBm	+30dBm	Consult Factory
DC Input	+11 to 36Vdc	HPU powered from TXU	+11 to 36Vdc	HPU powered from TXU	+11 to 36Vdc	HPU powered from TXU
Weight	7 lbs. (3.2Kg)	9.6 lbs. (4.32 Kg)	13.4 lbs. (6.03Kg)	9.6 lbs. (4.32 Kg)		9.6 lbs. (4.32 Kg)
Operating Temperature	–4° F to 122° F (–20° C to +50° C)					
Operating Humidity	95% @ 50° F to 104°					
Operating Altitude	15,000 feet (4,572 meters)					

TRANSMITTER

MPEG Encoder Specifications:

SDI Input: . . . . . ANSI/SMPTE 259M Level C
270Mb/s, 525/625 Component
HD-SDI, SMPTE 292M @1.485 Gbps, 75 ohms
2 Stereo Audio De-embedding provided AES/EBU
Composite Video:. Composite (75 ohms)1 Vpp NTSC/PAL
BNC / Return Loss, Minimum 28 dB at 6MHz
Chroma/Level (Selectable): . . 4:2:2 Profile @ Main Level or
4:2:0 Profile @ Main Level
Frame Size:. . . . . Horizontal Res. 720 pixels
Vertical Res: 480/525 NTSC, 576/625 PAL
Video Encoding Rate:2 to 30 Mbits Constant Bit Rate (4:2:2)
1.5 to 15 Mbits, Constant Bit Rate (4:2:0)
Latency (Selectable) – Bit Rate Dependent:
Standard Mode: . . . . .<200 ms / Low Delay Mode: <100 ms
VBI Processing: . . . . . Extended Picture Mode (4:2:2)
Closed Caption:. Supports line 21 (NTSC) CC EIA 608 std
Audio Coding: . . . . . MPEG–II layer 2 (ISO/IEC 13818-3)
ISO/MPEG 11172.3 Layer II (MUSICAM)
Digital Audio Inputs (Configurable):. . . . . .
Supports AES/EBU audio inputs (2 pairs)
balanced inputs – 48 KHz sampling
Audio Channels (select): . . . . . .
Analog audio (2 stereo pairs) balanced, 600 ohm/
600 ohms High Z (selectable)
Min. Audio Bit Rate: . . . . . .
192 Kbits/channel, 384 Kbits stereo
Lower audio bit rates down to 128 Kbits selectable
Audio Input Levels: . . . . . +18 dBm clip level
Transport Stream Output:. . . Fully DVB compliant DVB–ASI
per ISO/IEC 13818-2 (188 byte packets) continuous bit rate
Output Monitor Port - Front Panel Connector (70 MHz):
Encryption: BISS-1, BISS-E
Video input: NTSC/PAL, ASI

HD Encoder Specifications

HD MPEG-2 4:2:0MP@HL 5-100Mbits
MPEG-2 4:2:2MP@HL 5-100Mbits Y (Optional) Resolution
(HxVx frame rate)
1280x720p 50/ 59.94/ 60Hz
1920x1080i 25/ 29.97/ 30Hz
1920x1080p 24/25/30/23.976/29.97Hz
1920x1080pSf 24/25/30/23.976/29.97Hz
Encryption: . . . . . BISS 1 & E to 70Mbps
Audio:. . . . . .
HD-SDI 4 embedded channels (2 stereo) SMPTE 299M
AES (128 bit) to internal specification
Audio MPEG-2 layer 1
MPEG-2 layer 2
Linear PCM (using SMPTE 302M encapsulation)
Transport of compressed audio (Dolby D & E) on AES Input

COFDM Specifications

COFDM IF Output (Monitor): . . . . . 70 MHz @ –5 dBm
COFDM Bandwidth (Selectable): . . . 6 MHz, 7 MHz, 8 MHz
COFDM Carriers: . . . . . DVB-T specifications 2K Carriers
Modulation Type: . . . . . QPSK, 16QAM, 64QAM
FEC: 1/2, 2/3, 3/4, 5/6, 7/8
Guard Intervals (Selectable): 1/32, 1/16,1/8,1/4
70 MHz Carrier Insert Capability

Analog Audio & Video Modulator

Monitor Outputs: . . . . . 70 MHz signal/pass thru
Level output/Impedance: . . . . . +2 dBm Analog/75 Ohms
Signal Inputs:. .Video, Composite 70 MHz (–10 dBm Analog)
Video Mute: . . . . . 70 MHz test tone - auto
FM Deviation (Selectable): . . . . . 3 MHz and 4 MHz - peak
Video Input/Return Loss: . . . . . 1 Vpp (75 ohms)
525/625 line / > 26 dB
Plug in Video Filter Options: . . . . . 4.2, 5.0, 5.5 MHz
Video Response: ± 0.25 dB @ or within video filter bandwidth

Video Performance:

S/N: . . . . . > 68 dB (weighted per RS-250C)
S/H: . . . . . > 63 dB (weighted per RS-250C)
Diff. Phase / Gain:. . . . . 1 degree / 1 %
Baseband Response:. . . . . 10 KHz to 8 MHz
+0.5 dB / 8 MHz to 12 MHz <2 dB
Audio Channels:. . . . . 4 Channel Analog
Line level: +8 dBm (600 ohms)
Subcarrier input tune range: . . . . . 4.5 MHz to 8.59 MHz
Tunable in 2 KHz steps

Audio Performance:

Frequency Response . . . . . (40 Hz - 15 KHz):±1.0 dB
(40 Hz - 10 KHz):±0.5 dB
THD: . . . . . 0.5 % @ 1 KHz (75 KHz deviation)
2.0 % @ 1 KHz (200 KHz deviation)
Signal/Noise: . . . . . 68 dBm (min.)
Output Impedance (select): . . . . . 600 ohms bal./10K ohms
Output Level (adjust): . . . . . +8 dBm - Line Level
nominal (0 dBm to +18 dBm)
Audio channel crosstalk: . . . . . 60 dB
Emphasis: . . . . . 50 µs/75 µs, flat - jumper selectable
Control Interface:. . . 2 wire serial comm. port as DC input

Wayside Channel

Embedded data channel on MPEG Module
(Uses the RS-232 port for DCE Data Path)
Data Rates 1200, 2400, 4800, 9600, 19200, 38400

RECEIVER

MPEG Decoder

Delay Mode: . . . . . .40 ms
Chroma Profile: 4:2:2/4:2:0
Line Standard: 526/625
GOP Structures: . . . . . Variable GOP
Horizontal Resolution: . . . . . 720, 704, 544, 352 Selectable
Vertical Resolution: . . . . . 576 (625 line), 480 (525 line)
Bit rates:. . . . . 4:2:0 – 1.5 Mbits – 15 Mbits
4:2:2 – 2.0 Mbits – 50 Mbits
Audio Coding: . . . . . MPEG–II layer 2 (ISO/IEC 13818-3)
ISO/MPEG 11172.3 Layer II (MUSICAM)
Audio Channels: . . . . . 4 Analog
AES/EBU Digital Audio Option
SDI with Embedded Audio
Bit Rates: . . . . . 32 to 448 Kbits/s
Sampling: . . . . . 32 KHz and 48 KHz
Composite Video Output: . . . NTSC (w/wo pedestal) /PAL

SD Decoder (HD Optional)

	Standard
SD	4:2:0 MP@ML
	4:2:2 P@ML
HD	4:2:0 MP@ML
	4:2:2 MP@ML

CODFM Demodulation

(DVB-T Compliant)
IF Input: . . . . . 70 MHz
Input Range: . . . . –10 dBm nominal, (–10 dBm to –12 dBm)
Bandwidth (Selectable): . . . . . 6 MHz, 7 MHz, 8 MHz
Threshold: . . . C/N-within 2 dB of ET51 300 744 Standard
COFDM Acquisition Speed: . . . . . 100 Msec (typical)
Modulation Type: . . . . . QPSK, 16QAM, 64QAM
Output:. . . . . DVB-ASI, SDI, MPEG Composite
Packet Length: . . . . . .188 bytes
Forward Error Correction (FEC)-Auto Detect:. . . . . .
1/2, 2/3, 3/4, 5/6, 7/8
Guard Intervals-Auto Detect: 1/32, 1/16,1/8,1/4
(selectable using presets)

Analog Audio & Video Demodulator

Level Input: . . . . . (0 dBm to –2 dBm) 0 dBm nominal
Impedance: . . . . . 75 ohms
Composite Outputs: . . . Switched outputs / Baseband/video
Video Output: . . . . . 1 Vpp (75 ohms) 525 /625 line
Return Loss: . . . . . >26 dB
Plug In Video Low Pass Filters: . 4.2 MHz, 5.0 MHz, 5.5 MHz
Video Response: ±0.25 dB @ within video filter bandwidth
Video Performance (15 MHz L/C IF Filter):
Signal/Noise:. . . . . >68 dB (weighted per RS-250C)
Signal/Hum:. . . . . >63 dB (weighted per RS-250C)
Differential Phase: . . . . . 1 degree
Differential Gain: 1%
Chroma/Luminance Gain: 4%
Chroma/Luminance Delay: . . . . . ±20 nS
Threshold (2 GHz): . . . . . –87 dBm @ 37 dB video S/N
Threshold (7 GHz): . . . . . –86 dBm @ 37 dB video S/N
Field Tilt: 1%
Output Level Adjust: . . . . . +3dB to –6dB, squelch
1 Vpp @ 4 MHz peak deviation - nominal
1 Vpp @ MHz peak deviation
Baseband Response: . . . . . 10 KHz to 8 MHz +0.5 dB
8 MHz to 12 MHz < 2dB
Audio Channels: . . . . . 4 Independent Subcarriers
Subcarrier input tune range: . . . . . 4.5 MHz to 8.59 MHz
tunable in 5 Khz steps (local/serial control)
programmable presets

Audio Performance:

Frequency Response: . . . . . (40 Hz to 15 KHz): ±1.0 dB
(40 Hz to 10 KHz): ± 0.5 dB
Threshold: . . . . . 0.5 % @ 1 KHz (75 KHz deviation)
. . . . . .2.0 % @ 1 KHz (200KHz deviation)
Signal/Noise: . . . . . 68 dB (min)
Output Impedance: . . . . . .
600 ohms balanced/10 K ohms (selectable)
Output Level (adjust): . . . . . +8 dBm – line level – nominal
(0 dBm to +18 dBm) – local/serial
Audio Channel Crosstalk: . . . . . 60 dB
De-emphasis: . . . . . 50 uS/75 uS , flat – jumper selectable

Wayside Channel

Embedded data channel on MPEG Module – (uses
connections on the RS-232 port for DCE Data Path)
Data Rates:. 1200, 2400, 4800, 9600, 19200, 38400

© 2014 Vislink Group. All rights reserved. All other products or services referenced herein are identified by the trademarks or service marks of their respective companies or organisations. Note: Vislink reserves the right to change specifications without notice. Please contact your representative to confirm current specifications.

11/14 ENG
RD001605 Rev 2

PTX-PRO

Transmitter

The PTX-PRO is the ideal solution for portable, mobile, or airborne applications. The PTX-PRO Transmitter Unit is a versatile portable transmitter featuring user selectable choices of FM and COFDM Modulation with SD/HD MPEG Encoding. Built in universal AC and DC power supplies provide full flexibility in choosing power sources.

The PTX-PRO accepts SDI or HD-SDI, ASI, or video analog inputs. The integrated MPEG-2 Encoder can support both SD and HD.

The PTX-PRO is controlled using a single front panel combination push button rotary switch. Operating parameters can be easily read from the front panel display.

From a PC or laptop, use the PTX-PRO Configurator Software to create, modify, and store configuration "presets" to be instantaneously recalled using the transmitter's front panel switch. The PTX-PRO Configurator stores multiple sets of presets.

The PTX-PRO uses a standard Type "N" RF connector providing for cabled or direct mounted antennas. The optional Twist Lock Adapter mounts over the RF connector to let you easily install or remove a variety of Parabolic or MegaHorn antennas, eliminating the need for coaxial interconnecting cables.

For high power applications, the PTX 2 GHz High Power Unit (HPU) can be mounted with the PTX-PRO, giving you 12 watts analog, 4 watts digital power.

HD/SD Transmitter 2, 7, 2/7 & 13 GHz
FM Video & Audio - MPEG & COFDM

BENEFITS

- Frequency bands:*
  - 1.9 to 2.5 GHz
  - 6.4 to 7.1 GHz
  - 6.9 to 7.5 GHz
  - Dual 2/7 GHz
  - 12.7 to 13.2 GHz

*Consult factory for different frequency options

- Digital or Analog/Digital Switchable
- Simplified Controls using Front Panel Display with Single Rotary/Push Button Switch
- 9 Programmable Configuration Presets store multiple programmed preset configurations
- Color Bar with Service Name ID Generator (digital only)
- FM Modulation
- Analog Video/Audio Modulation - NTSC or PAL
- 4 Audio Channels
- 3/4 MHz Peak Video Deviation

Key Features

- Fully Integrated 'Single Box' Transmitter
- Built in Power Amplifier
- Built in AC/DC Power Supplies - User Selectable
- Compact
- Tripod or Rack Mountable

Typical Applications

- Portable and Fixed Point to Point Microwave
- Quick Deploy, Medium Range Transmissions

SPECIFICATIONS

VISLINK

MODULATION
- COFDM (ETSI EN 300 744)
- DVB-T 2K-carriers
- LMS-T
- 12/25 MHz Channels
- FM Video with FM audio subcarriers

ANALOG DEVIATION
2 GHz BAS Band
- 17 MHz channel plan: 4.0 MHz peak
- 12 MHz channel plan: 3.0 MHz peak

2.45 GHz BAS and ISM Band
- 17 MHz Channels: 4.0 MHz peak

7 GHz Band
- 25 MHz Channel Plan:4.0 MHz peak

13 GHz Band
- 25 MHz Channel Plan:4.0 MHz peak

FM AUDIO SUBCARRIER SELECTION
2 GHz BAS / 7 GHz Band / 13 GHz:

17 MHz channel plan:
- 4.83, 5.2, 5.8, 6.2, 6.8, 7.02, 7.5, 8.065 MHz

12 MHz channel plan:
- 4.83 and 5.8 MHz

2.5 GHz BAS and ISM Band:
- 17 MHz channels: 6.2 and 6.8 MHz

OPERATING MODES
Modulation
- FM (Analog)
- COFDM, QPSK, 16QAM, 64QAM (Digital)

Auto Standby (3 modes)
- Auto - standby not activated
- Color bars inserted with no video
- RF standby with no video signal

MPEG ENCODING
SD Inputs
- Composite NTSC/PAL, and SDI per SMPTE 259M in field or frame based formats, with embedded audio support and audio de-embedding

HD inputs
- HD-SDI per SMPTE 292M in field or frame based formats with support for embedded AES3 per SMPTE 299M, including SMPTE 337M data in the AES3.

VBI
- Close-caption support, line extraction mode,extended picture mode, VITC support

Encoding
- BISS 1 & E

Video Encoding:
- All selectable via control/monitor interface
- All with support for 4:3 or 16:9 aspect ratios

	Standard
SD	4:2:0 MP@ML
	4:2:2 P@ML
HD	4:2:0 MP@HL
	4:2:2 MP@HL

Resolution (HxVx frame rate)

Resolu-tion	Resolution	Frame Rate
SD	720 x 480	29.97
	720 x 576	25
HD (Optional)	1280x720p	50/59.94/60
	1920x1080i	25/29.97/30
	1920x1080p	25/30

AUDIO ENCODING
- One stereo pair/ dual mono channels
- (optional: 2 pair) per MPEG Layer II audio encoding standard

Encoding Rates
- 32 to 384 kbps/ channel

Sampling rates
- 48 kHz
- Support for Dolby Digital AC-3 pass-thru
- Support for SMPTE 305M AES3
- Support for SMPTE 299M

Options
- BISS-1 or BISS-E Encryption
- Antenna Twist Lock Adapter

WAYSIDE CHANNEL
- Embedded data channel on MPEG Module (uses connections on the RS-232 port for DCE Data Path)

Data Rate
- 1200, 2400, 4800, 9600, 19200, 38400

POWER REQUIREMENTS
DC Input
- +11 to +36 VDC

AC Input
- 90 to 264 VAC @ 50/60 Hz

Power consumption:
- 52 watts (typical)

PHYSICAL
Dimensions
- 9.25" W, 4.0" H, 12.0" D

Weight:
- 2 & 7 GHz, 20.4 lbs [9.25 kg]
- 2/7 & 13 GHz, 21.0 lbs [9.53 kg]

Operating Temperature Range
- –20° C to +50° C

Operating Rel. Humidity
- 95% @+10° C to +40° C

Operating Altitude
- 15,000 ft. above sea level

POWER OUTPUT

Frequency Modulation (GHz)		Standard/HI Power	
		Watts	dBm
1.9 to 2.5	FM	2 / 12	33/41
	Digital	1/8	30/39
6.4 to 7.1 6.9 to 7.5	FM	2	33
	Digital	1/4	30/36
13	FM	1.6	32
	Digital	.8	29

Note: RF Power Output is dependent on digital modulation selected. High power version does not include AC power supply.

REAR PANEL CONNECTIONS
RF Output
- N type

RS-232 Communication Port
- 9–Pin "D" Connector

Audio Input 3 & 4
- 10-pin Circular

Power on Coax (HPU)
- ON/OFF

FRONT PANEL CONNECTIONS
Signal Input, Monitor, ASI/SDI Input
- BNC

AC/DC Power Input
- 12–Pin Circular

Audio Input 1 & 2
- XLR (Qty 2)

SDI/HD/SD Input
- BNC

CONTROLS & INDICATORS
Rotary Channel Select Switch
- 1–14

Rotary Channel Offset Switch
- +.–,0

Push/Rotary
- Control Switch

LED Indicators:
- Power ON/OFF,
- Transmit (XMIT) ON/OFF

ACCESSORIES
- 2 GHz PTX High Power Unit (HPU)
- Standard or Airborne Remote Control Panel (Serial Interface)
- Medium or Heavy Duty Tripod

CONTROLS & DISPLAYS
Controls
- Preset, Channel/Offset, TX Attenuation

Displays
- Analog (FMT): Preset. Frequency, Mode, Audio Channel Frequency, Video Deviation, CW Tone, Error Report
- Digital (MPEG/COFDM): Preset. Frequency, Mode, Modulation, Bandwidth, FEC, Guard Interval, Video Delay, Audio Mode, CW Tone, Error Report, RF Power Out

PTX-PRO CONFIGURATOR SOFTWARE
(RS-232 connection to PC or laptop)

Menus
- Main: Connect to Radio, Load Presets, Save Presets, Select Module Options,Program Radio, Upload Radio Settings
- Radio: Operating Mode, Color Bars, CW Tone, Transmitter Attenuation
- COFDM: Modulation, FEC, Bandwidth, Guard Interval
- MPEG: ASI Bit Rate, Wayside Baud Rate. Chroma, Delay Mode, BISS Key/ID, Audio Type, Audio Mode, Audio Input
- FMT: Audio Channel Frequency (4), Pre-Emphasis, Video Deviation
- Channel Plan: Select Frequency +/– Offset, Clear Channel Plan, Load Default FCC Plan, Load Channel Plan, Save Channel Plan

ANTENNAS
- 2, 3, or 4 foot parabolic: (4ft requires L-Bracket & heavy duty tripod, 2 and 3 foot require Twist Lock Adapter)
- MegaHorn (Requires Twist Lock Adapter)
- OmniDirectional - Coaxial cable connection to "N" connector

11/13 ENG
RD001108 Rev 3

© 2014 Vislink Group. All rights reserved. All other products or services referenced herein are identified by the trademarks or service marks of their respective companies or organisations. Note: Vislink reserves the right to change specifications without notice. Please contact your representative to confirm current specifications.

PRX-PRO

OVERVIEW

The PRX-PRO is the ideal solution for portable, mobile, or airborne applications. The PRX-PRO is a versatile portable receiver featuring user selectable choices of FM and COFDM Demodulation with MPEG Decoding. Built in universal AC and DC power supplies provide full flexibility in choosing power sources. The PRX-PRO is offered in 2, 7, 2/7 Switchable, and 13 GHz versions.

The PRX-PRO outputs NTSC or PAL formats with up to four audio channels. The integrated MPEG-2 Decoder can support both SD and HD.

The PRX-PRO is controlled via user friendly front panel combination push button rotary switches. Operating parameters can be easily read from the front panel display.

From a PC or laptop, use the PRX-PRO Configurator Software to create, modify, and store configuration "presets" to be instantaneously recalled using the receiver's front panel switch. The PRX-PRO Configurator stores up to nine presets.

The PRX-PRO uses a standard Type "N" RF connector providing for cabled or direct mounted antennas. The optional Twist Lock Adapter mounts over the RF connector to let you easily install or remove a variety of Parabolic or MegaHorn antennas, eliminating the need for coaxial interconnecting cables. BNC connectors are supplied for video, IF, and ASI, with XLR connectors for audio.

SD/HD Receiver – 2, 7, 2/7, & 13 GHz
FM Video & Audio - MPEG & COFDM

BENEFITS

- Frequency bands:*
  - 1.9 to 2.5 GHz
    6.4 to 7.1 GHz
    6.9 to 7.5 GHz
    12.7 to 13.2 GHz

  *Consult factory for different frequency options
- Simplified Controls using Front Panel Display with Single Rotary/Push Button Switch
- Front Panel Channel Selector
- 9 Programmable Configuration Presets store multiple programmed preset configurations
- Color Bar with Service Name ID Generator (digital only)

Key Features

- Fully Integrated "SingleBox" Receiver
- Digital, or Analog/Digital Switchable
- Built-in AC and DC Power Supplies
- Compact and Lightweight
- Tripod or Rack Mountable

Typical Applications

- Portable and Fixed Point to Point Microwave
- Quick Deploy, Medium Range Transmissions

SPECIFICATIONS

VISLINK

GENERAL

Band Operation:
- 2, 7, Dual 2/7, & 13 GHz

Frequency Bands:
- 1.99 to 2.5 GHz / 2.3 to 2.7 GHz
- 6.4 to 7.1 GHz
- 6.9 to 7.5 GHz
- 12.7 to 13.2 GHz

RF Input Range:
- –25 dBm to –95 dBm

IF Output:
- 70 MHz

IF/AGC Level Output:
- +0 dBm (±1 dB) – Analog
- –10 dBm (±1 dB) – Digital

Stability (RF-IF):
- ± 2.5 ppm

Dual IF Filter Bandwidths:
- 1) 8 MHz SAW/10 MHz
- 2) 8 MHz SAW/15 MHz
- 3) 8 MHz SAW/20 MHz
- 4) 18 MHz SAW/30 MHz

IF Linearity (IMR):
- >40 dB @ 70 MHz

Squelch Adjust:
- ON/OFF

Level
- (25 dB from threshold)

ANALOG AUDIO & VIDEO DEMODULATOR

Level Input:
- (0 dBm to –2 dBm) 0 dBm nominal

Impedance:
- 75 ohms

Composite Outputs:
- Switched / Baseband/video

Video Output:
- 1 Vpp (75 ohms) 525 /625 line

Return Loss:
- >26 dB

Plug In Video Low Pass Filters:
- 4.2 , 5.0, & 5.5 MHz

Video Response:
- ±0.25 dB @ within video filter bandwidth

VIDEO PERFORMANCE

(15 MHz L/C IF Filter):

Signal/Noise:
- >68 dB (weighted per RS-250C)

Signal/Hum:
- >63 dB (weighted per RS-250C)

Differential Phase:
- 1 degree

Differential Gain:
- 1%

Chroma/Luminance Gain:
- 4%

Chroma/Luminance Delay:
- ±20 nS

Threshold (2 GHz):
- –87 dBm @ 37 dB video S/N

Threshold (7 GHz):
- –86 dBm @ 37 dB video S/N

Field Tilt:
- 1%

Output Level Adjust:
- +3dB to –6dB, squelch
- 1 Vpp @ 4 MHz peak deviation - nominal
- 1 Vpp @ MHz peak deviation

Baseband Response:
- 10 KHz to 8 MHz +0.5 dB
- 8 MHz to 12 MHz < 2dB

Audio Channels:
- 4 Independent subcarriers

Subcarrier input tune range:
- 4.5 MHz to 8.59 MHz

(tunable in 5 Khz steps)

VIDEO

- SDI SMPTE 259M @270 Mbps, 75 ohm
- HD-SDI, SMPTE 292M @1.485 Gbps, 75 ohms

AUDIO PERFORMANCE:

Frequency Response:
- (40 Hz to 15 KHz): ±1.0 d
- (40 Hz to 10 KHz): ± 0.5 d.

Threshold:
- 0.5 % @ 1 KHz (75 KHz deviation)
- 2.0 % @ 1 KHz (200KHz deviation)

Signal/Noise:
- 68 dB (min)

Output Impedance:
- 600 ohms balanced/10 K ohms (selectable)

Output Level (adjust):
- +8 dBm – line level – nominal
- (0 dBm to +18 dBm) – local/serial

Audio Channel Crosstalk:
- 60 dB

De-emphasis:
- 50 uS/75 uS (set at factory

COFDM DEMODULATION

(DVB-T Compliant)

Bandwidth (Selectable):
- 6 MHz, 7 MHz, 8 MHz

Threshold:

C/N-within 2 dB of ET51 300 744 Standard

COFDM Acquisition Speed:
- 100 Msec (typical)

Modulation Type:
- QPSK, 16QAM, 64QAM

Output:
- DVB-ASI, SDI, MPEG Composite

Packet Length:
- 188 bytes

FEC – Auto Detect:
- 1/2, 2/3, 3/4, 5/6, 7/8

Guard Intervals-Auto Detect:
- 1/32, 1/16,1/8,1/4 (selectable using presets)

MPEG DECODER

Delay Mode: 40 ms

Chroma Profile: 4:2:2 / 4:2:0

Audio Channels: 4 Analog

AES/EBU Digital Audio Option
- SDI with Embedded Audio

Line Standard: 526/625

GOP Structures: Variable GOP

SD DECODER (HD OPTIONAL)

	Standard
SD	4:2:0 MP@ML
	4:2:2 P@ML
HD	4:2:0 MP@HL
	4:2:2 MP@HL

Resolution (HxVx frame rate)

Resolu-tion	Resolution	Frame Rate
SD	720 x 480	29.97
	720 x 576	25
HD (Optional)	1280x720p	50/59.94/60
	1920x1080i	25/29.97/30
	1920x1080p	25/30

ISO/MPEG 11172.3 LAYER II (MUSICAM)

Bit Rates:
- 32 to 448 Kbits/s

Sampling:
- 32 KHz and 48 KHz

Composite Video Output:
- NTSC (w/wo pedestal) /PAL

WAYSIDE CHANNEL

- Embedded data channel on MPEG Module (uses connections via RS-232 port for DCE Data Path)

DATA RATES:

- 1200, 2400, 4800, 9600, 19200, 38400

POWER REQUIREMENTS

DC Input:
- +11 to +36 VDC

AC Input:
- 84 to 264 VAC @ 50/60 Hz

Power consumption:
- 35 watts (typical)

PHYSICAL

Dimensions:
- 9.25" W, 4.0" H, 12.0" D

Weight:
- 2 & 7 GHz, 15.2 lbs [6.9 kg]
- 2/7 GHz, 15.6 lbs [7.1 kg]

Operating Temperature Range
- –20° C to +60° C

Operating Relative Humidity
- 95% @+10° C to +40° C

Operating Altitude
- 20,000 ft. above sea level

REAR PANEL CONNECTIONS

RF Input:
- N type

GENLOCK:
- BNC

RS-232 Communication Port:
- 9–Pin "D" Connector

Audio Output 3 & 4:
- 10-pin Circular

FRONT PANEL CONNECTIONS

Signal Output, Monitor, ASI/SDI Output:
- BNC

AC/DC Power Output:
- 12–Pin Circular

Audio Output 1 & 2:
- XLR (Qty 2)

CONTROLS & INDICATORS

Rotary Channel Select Switch:
- 1–14

Rotary Channel Offset Switch:
- +,–,0

Rotary Band Select:
- 2 or 7 GHz
- Push Button/Rotary Switch Receiver settings

Display:
- 2 Rows, Alpha Numeric Characters

LED Indicators:
- Power ON/OFF

ANTENNA

- Omni, Horn, Parabolic; 2' (.6m), 3' (.9m), 4' (1.2m)
- Twist lock adapter

OPTIONS

- BISS-1 or BISS-E Encryption
- Antenna Twist Lock Adapter

Front Panel Controls & Displays

CONTROLS

Analog: Preset, Set Channel/Offset, Set RF Band, Set IF Filter, Set Monitor, Adjust Squelch

Digital: Preset, Set Channel/Offset, Set RF Band, Set IF Filter, Set Monitor, Set OFDM Bandwidth

DISPLAYS

Analog FMR: Preset, Band, Frequency, Channel, IF Filter, Operating Mode, Audio Channel Frequency, Video Deviation, Video Mute, Audio De-emphasis (On/Off), Error Screen

Digital: Preset, Band, Frequency, Link Quality, Channel, Modulation, Bandwidth, FEC, Guard Interval, Pre/Post Vertibi, COFDM Lock/Unlock, Video Output, Audio Lock/Unlock, Audio Type, Color Bar Generator, Transport Stream Lock/Unlock, Error Screen

Prx-Pro Configurator Software Menus

(RS-232 connection to PC or laptop)

Main: Connect to Radio, Load Presets, Save Presets, Select Module Options, Program Radio, Upload Radio Settings

Radio: Preset, Operation Mode, Select Filter (Analog/Digital), Squelch Level, Monitor Select (IF/ASI), COFDM: COFDM Bandwidth (6,7, 8 MHz) or Auto

MPEG: Gen Lock (On/Off -if equipped), NTSC Pedestal (On/Off), Color Bars (On/Off) Audio Output (Analog/AES-EBU), BISS-1 or BISS-E keys

FMR: Preset, Video Deviation (3/4 MHz), Low Pass Filter (On/Off), Audio Channel Frequency (4 channels), Select Deemphasis/ filtered

Channel Plan: Center Frequency, Offset (+/0/–), Select Band (2/7 GHz), Clear Channel Plan, Load Channel Plan, Default FCC Plan, Save Channel Plan

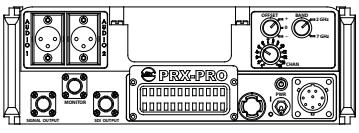

Front View

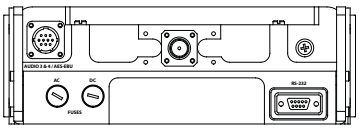

Rear View

© 2014 Vislink Group. All rights reserved. All other products or services referenced herein are identified by the trademarks or service marks of their respective companies or organisations. Note: Vislink reserves the right to change specifications without notice. Please contact your representative to confirm current specifications.

10/14 ENG
RD001603 Rev1

EXCLUSIVE REPRESENTATIVE:

PHASE Engenharia Ind. e Com. Ltda.

Av. Olegário Maciel 231, Lojas 101 a 105
Barra da Tijuca | Rio de Janeiro, RJ | CEP 22 621 200
Tel +55.21.2493.0125

Av. Ibirapuera 2.907, Conj. B306 & 7 - Ed. Conv. Corp. Plaza – Torre C
Indianópolis | São Paulo-SP | CEP 04029-200
Tel +55 11 3589-0125

phase@phase.com.br | www.phase.com.br